ITV ICE MAKERS

Ice for Life®

SPIKA NG 125 / 175 / 215 / 285

SPIKA NG 125
130/45

SPIKA NG 175
195/80

SPIKA NG 215
225/80

SPIKA NG 285
300/105

Daily Ice Production / Ice Storage

Standard Features

NEW WATER DISTRIBUTOR
Increases resistance against scale build up. Easily removable and cleanable.

INLET WATER CONNECTION THROUGH EVAPORATOR
Helps to harvest. Precools water. Assists energy recovery.

SEAL-LESS PUMP OUTSIDE ICE ZONE

ELECTROMECHANIC CONTROLS
The machine works with electro-mechanical timer and thermostats. Simple, easy to comprehend and service. High reliability and low spare expense.

DUAL SWITCH
External switch allows to switch the machine on/off easily. Removing the top cover, we have the wash / cycle switch on one side of the electrical box.

STRONG INOX FRAME
Box-type frame with stainless steel supports, makes the machine stronger and allows servicing operation without disassembling the entire machine.

EASY ACCESS FOR SERVICE AND INSTALLATION
Designed to have better access to all components making installation and servicing operations easier. One person can disassemble the machine with a basic screwdriver.

FRONT VENTILATION
Condensing unit permits 100% front ventilation, air inflow and outflow through the front grill, thus permitting embedded installation.

INSULATED STORAGE BIN
Storage bin with polyurethane foam insulation gives higher rigidity with lower heat transmission.

OPERATING LIMITS
Tropicalized machines (ClassT); Suitable for high temperature environments of 109ºF. Water pressure Ice Maker: Min. 10 psi (0.7 bar) / Max. 85 psi (6 bar). NOTE: Install a pressure reducer if water inlet pressure is more than 85 psi (6 bar).

ELECTRICAL SPECIFICATIONS
115/60Hz/1 - Fuse Size 15 - Nema Plug Type 5-15P. Also avalaible 208/60-220/50

WARRANTY
36 months parts and labor / Additional Warranties: Evaporator and compressor 24 months, parts only.

SPIKA NG 125 / 175 / 215 / 285 Ice Cube Makers

ITV ICE MAKERS

Ice for Life®

SPIKA NG 125 / 175 / 215 / 285

Dimensions (INCH)

SPIKA	W	D	H
NG 125	21.1	23.4	31.3
NG 175	26	27.6	33
NG 215			
NG 285	30	30	

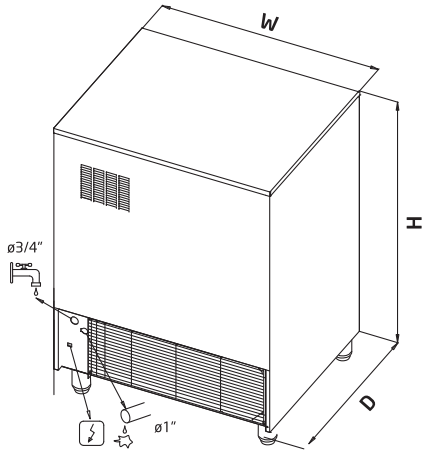

6" Leveling legs
Drain height 5.5"

General Specifications

SPIKA	Production 70°F Air/50°F Water Lbs/24h.	Production 70°F Air/50°F Water Kg/24h.	Production 90°F Air/70°F Water Lbs/24h.	Production 90°F Air/70°F Water Kg/24h.	Bin Lbs	Cubes/Cycle	Power W	RLA A	R404A oz	Net Weight lbs
18064 NG 125 A 1 F	128	58	98	45	44	75	473	6	12.3	115
17064 NG 125 A 1 H	130	59	101	46	44	150	430	6	12.3	115
18065 NG 125 W 1 F	131	59	103	47	44	75	470	6	12.3	115
17055 NG 125 W 1 H	135	61	104	47	44	150	470	6	12.3	115
18094 NG 175 A 1 F	196	89	154	70	81	120	550	7	18.3	133
17094 NG 175 A 1 H	198	90	157	71	81	240	550	7	18.3	134
18095 NG 175 W 1 F	201	91	158	72	81	120	550	7	18.3	134
17095 NG 175 W 1 H	203	92	161	73	81	240	550	7	18.3	134
18114 NG 215 A 1 F	225	102	172	78	81	120	600	8	21.2	152
17114 NG 215 A 1 H	227	103	176	80	81	240	650	8	21.2	152
18115 NG 215 W 1 F	228	104	179	81	81	120	650	8	21.2	152
17115 NG 215 W 1 H	232	105	181	82	81	240	650	8	21.2	152
18144 NG 285 A 1 F	297	135	243	110	108	144	710	7.8	29.5	187
17144 NG 285 A 1 H	300	136	245	111	108	288	730	7.8	29.5	187
18145 NG 285 W 1 F	299	136	247	112	108	144	710	7.8	29.5	187
17145 NG 285 W 1 H	306	139	248	113	108	288	710	7.8	29.5	187

ITV Product Naming Key; A: Air / **W:** Water / **H:** Half Size Cube / **F:** Full Size Cube / **1:** 115V/60Hz/1

Ice Shapes

FULL SIZE CUBE & HALF SIZE CUBE

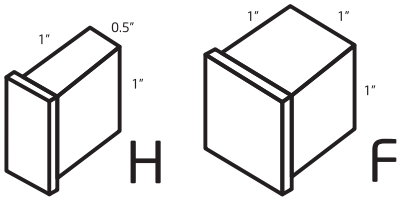

ITV ICE MAKERS, Inc.
12800 NW 38th Ave.
Miami, FL 33054-4525

Ph: +1 786 369 7480 / FX: +1 786 369 7481
1-888-ITV 1 ICE
www.itvice.com

FOR SALES: sales@itvice.com
FOR SERVICE: service@itvice.com

ISO 9001

C0D.49526 - 06/b/2011